BELLE
LIGHT
CONSTRUCTION
EQUIPMENT

Altrad-Belle.com

MBX 12/180 & 08/120E+

GB Operators Manual

4

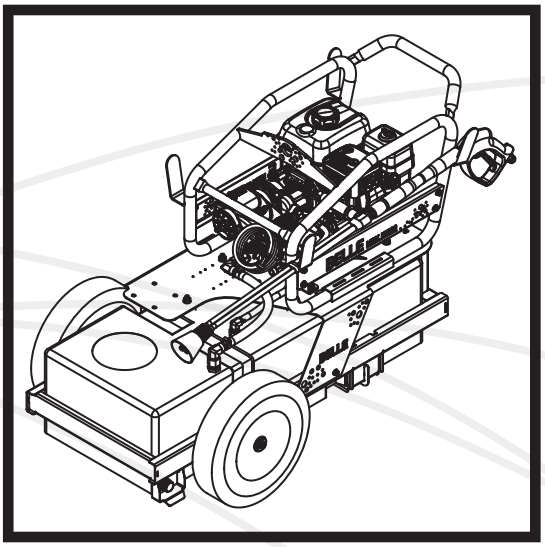

2

UKCA Declaration of Conformity

3

EC/EU Declaration of Conformity

870/60002/2
04/26

Declaration Of Conformity (DOC)

We, **Altrad Belle, Sheen, Nr. Buxton, Derbyshire, SK17 0EU, GB** declare that the DoC is issued under our sole responsibility and belongs to the followings product(s):

PRODUCT TYPE .....

MODEL.....

SERIAL No.....

DATE OF MANUFACTURE ....

SOUND POWER LEVEL MEASURED /.....
.....**(GUARANTEED)**

WEIGHT.....

Object of the Declaration:
Petrol/Diesel engine driven, heavy-duty, cold water, high pressure washers.

The object of the declaration described above is in conformity with the relevant **Statutory Requirements**:

- 2008 No. 1597	Supply of Machinery (Safety) Regulations 2008
- 2001 No. 1701	Noise Emission in the Environment by Equipment for use Outdoors Regulations 2001
- 2016 No. 1091	Electromagnetic Compatibility Regulations 2016
- 2012 No. 3032	The Restriction of the Use of Certain Hazardous Substances in Electrical and Electronic Equipment Regulations 2012

The following designated standards and technical specifications have been applied:

- EN ISO 12100:2010	Safety of machinery
- BS EN 1829-1:2021	High-pressure water jet machines. Safety requirements - Machines
- ISO 3744:2010	Acoustics — Determination of sound power levels and sound energy levels of noise sources using sound pressure

Technical Files are held by **Mark Pickard** at the Altrad Belle address stated above:-

Place of Declaration:-

Sheen,
Nr. Buxton,
Derbyshire,
SK17 0EU,
UK

Signed by:

Mark Pickard
Managing Director
On behalf of Altrad Belle
Sheen, Derbyshire, UK

Date of Declaration:-

April 2026

867/60001/2

EC Declaration Of Conformity (DOC)

We, **Altrad Belle, Sheen, Nr. Buxton, Derbyshire, SK17 0EU, GB** declare that the DoC is issued under our sole responsibility and belongs to the followings product(s):

PRODUCT TYPE .....

MODEL.....

SERIAL No.....

DATE OF MANUFACTURE .....

SOUND POWER LEVEL MEASURED / .....(GUARANTEED)

WEIGHT.....

Signed by:

Mark Pickard
Managing Director
On behalf of Altrad Belle, Sheen, Derbyshire, UK

Place of Declaration:-
Sheen, Nr. Buxton, Derbyshire, SK17 0EU, UK
Date of Declaration:-
April 2026

Object of the Declaration:
Petrol / diesel engine driven, or battery powered heavy-duty, cold water, high pressure washers.

The object of the declaration described above is in conformity with the relevant **Union Harmonisation Legislation**:
- 2006/42/EC - New machinery directive **- 2000/14/EC** - Noise - equipment for use outdoors

The following harmonised standards and technical specifications have been applied:
- EN ISO 12100:2010 Safety of machinery
- BS EN 1829-1:2021 High-pressure water jet machines. Safety requirements - Machines
- ISO 3744:2010 Acoustics - Determination of sound power levels and sound energy levels of noise sources using sound pressure

Technical Files are held by **Armand Trenel** at the following address:-
Altrad Investment Authority SAS: 150 Rue Le Pérugin, 34000 Montpellier, France.

EU Declaration Of Conformity (DOC)

We, **Altrad Belle, Sheen, Nr. Buxton, Derbyshire, SK17 0EU, GB** declare that the DoC is issued under our sole responsibility and belongs to the followings product(s):

PRODUCT TYPE .....

MODEL.....

SERIAL No.....

DATE OF MANUFACTURE .....

SOUND POWER LEVEL MEASURED / .....(GUARANTEED)

WEIGHT.....

See information on sticker above

Signed by:

Mark Pickard
Managing Director
On behalf of Altrad Belle, Sheen, Derbyshire, UK

Place of Declaration:-
Sheen, Nr. Buxton, Derbyshire, SK17 0EU, UK
Date of Declaration:-
April 2026

Object of the Declaration:
Petrol / diesel engine driven, or battery powered heavy-duty, cold water, high pressure washers.

The object of the declaration described above is in conformity with the relevant **Union Harmonisation Legislation**:
- 2014/30/EU - EMC directive **- 2011/65/EU** - Restriction of Hazardous Substances Directive

The following harmonised standards and technical specifications have been applied:
- EN ISO 12100:2010 Safety of machinery
- BS EN 1829-1:2021 High-pressure water jet machines. Safety requirements - Machines
- ISO 3744:2010 Acoustics - Determination of sound power levels and sound energy levels of noise sources using sound pressure

Technical Files are held by **Armand Trenel** at the following address:-
Altrad Investment Authority SAS: 150 Rue Le Pérugin, 34000 Montpellier, France.

Contents

CONTENTS **PAGE NUMBER**

UKCA DECLARATION OF CONFORMITY **2**
EC/EU DECLARATION OF CONFORMITY **3**

INTRODUCTION **5**
WARNING 5
Serial Numbers 6

MACHINE DESCRIPTION
General 6
Standard Operation 6
Danger Zone 6
Main Component Locations 7
Pressure Washer Component Locations - MBX 12/180 8
Pressure Washer Component Locations - MBX 08/120E+ 9
Power Unit Components 10
Battery Pack Components 10
Battery Charger 11

TECHNICAL DATA
Static Dimensions 12
General Data 12

SAFETY INSTRUCTIONS
General 13
Pre-Start Checks 13
Worksites 13
Prior to Operarting the Machine 14
Operating the Machine 14
Fuel Safety 14
Oil and Lubricants 14
Battery Charger 15
Battery Pack ..... 15 - 16
Tyre Safety 16
Transportation 16
During Maintenance 16
After Maintenance 16
Modifications & Replacement Parts 16
Risk Assessment 17
Safety Decals 18

OPERATING INSTRUCTIONS
Pre-Operation 19
Hose Connection - High Pressure Outlet 19
Charging the Battery Pack 19
Inserting the Battery Pack into the Power Unit 20
Stopping the Power Unit 20
Starting the Power Unit 20
Adjusting the Speed 20
Stopping the Engine 20
Starting the Engine 20
Operating the Machine 21
Removing the Battery Pack from the Power Unit 21
Checking the Charge Level of the Battery Pack 21

STORAGE **22**

SERVICE AND MAINTENANCE
General 23
Maintenance Schedule 23
Cleaning 24
Troubleshooting Guide ..... 25 - 26
Environment 26

WARRANTY **27**

REPLACEMENT PARTS **27**

Introduction

GB

The purpose of this publication is to enable the owner/operator to maintain and use the machine efficiently. If these instructions are followed carefully they will contribute to years of efficient and profitable operation of the machines in the true Altrad Belle tradition.

The variations in operating conditions make it impossible for the company to make comprehensive or definite statements in its publications regarding performance and methods of use of its machines, or to accept any liability for any loss or damage which may result from these statements, or from any errors or omissions.

When replacements are required, insist on genuine Altrad Belle parts, as extensive damage is liable to result from the use of inferior quality parts.

In accordance with the company's policy of continuous improvement to its machines, alteration to the specifications of machines may be made at any time without notice and the company accepts no responsibility for any discrepancies which may occur between the specifications of its machines and the descriptions thereof contained in this publications.

This manual has been written to include all factory fitted options and specifications for world-wide use, but this does not imply that all or any of these are included in the standard machine configuration. Therefore local Altrad Belle Dealer's must always be consulted about machine specifications.

This manual may not in part, or in whole, be copied, photocopied, reproduced, translated, or converted to any electronic or machine readable form without written consent of Altrad Belle.

Directives with regard to the notations.
Text in this manual to which special attention must be paid are shown in the following way:

CAUTION *The product can be at risk. The machine or yourself can be damaged or injured if procedures are not carried out in the correct way.*

WARNING *The life of the operator can be at risk.*

WARNING

GB

WARNING *Before you operate or carry out any maintenance on this tool **YOU MUST READ** and **STUDY** this manual.*

KNOW how to safely use the unit's controls and what you must do for safe maintenance. (NB Be sure that you know how to switch the machine off before you switch on, in case you get into difficulty.)
ALWAYS wear or use the proper safety items required for your personal protection. If you have **ANY QUESTIONS** about the safe use or maintenance of this unit, ASK YOUR SUPERVISOR OR CONTACT: **Altrad Belle (UK):** +44 (0) 1298 84606

Serial Numbers

ENSURE you make a note of the serial numbers of your tool and always quote them in any communication with Altrad Belle or one of our dealers.

A - MACHINE SERIAL NUMBER

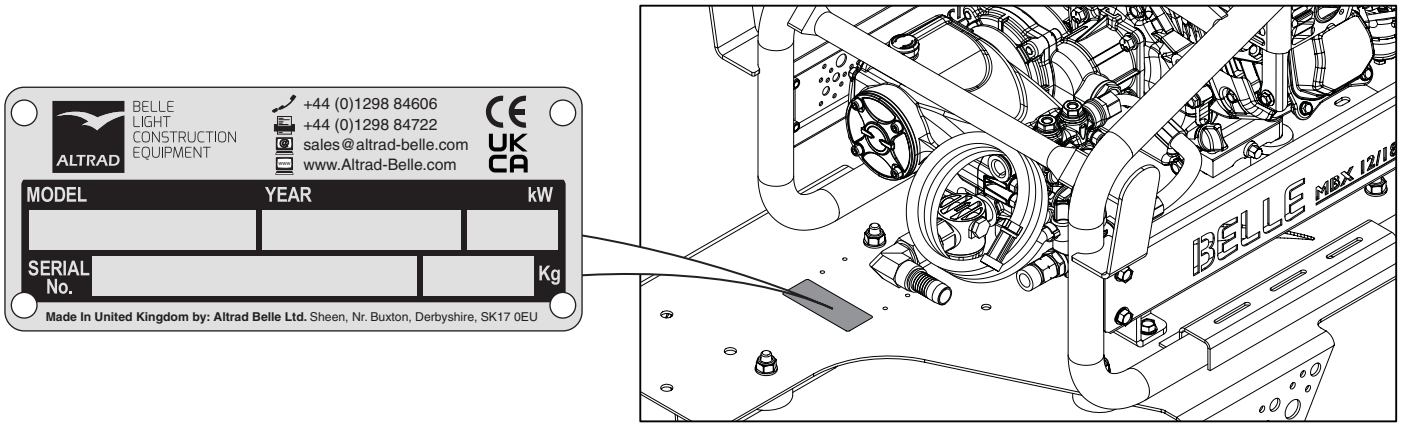

Machine Description

GENERAL

The 125-litre MBX Mini Bowser Pressure Washer is designed to satisfy the demands of individuals who need maximum mobility without compromising performance. It guarantees a sufficient water supply for cleaning tasks whilst on the go and has the power to remove even the toughest dirt and grime from a range of surfaces.

STANDARD OPERATION

The machine is intended to be used in a variety of scenarios, in safe environmental conditions as described in this manual.

Any unauthorised modifications or attachments are prohibited. They may affect the performance and safety of the machine, potentially resulting in damage to the machine or injury to the operator.

Use of non-genuine replacement parts may also affect the performance and safety of the machine. potentially resulting in damage to the machine or injury to the operator.

DANGER ZONE

The danger zone is the area around the machine in which persons are endangered during standard operation as outlined above.

During operation of the machine, cordon off the work area and keep members of the public and unauthorized personnel at a safe distance away from the danger zone.

MAIN COMPONENT LOCATIONS

The diagram below shows a version of the Honda petrol driven MBX 12/180 with the optional 10m Hose Kit fitted.
However, the locations are the same as on the battery powered MBX 08/120E+ with the optional 10m Hose Kit fitted.

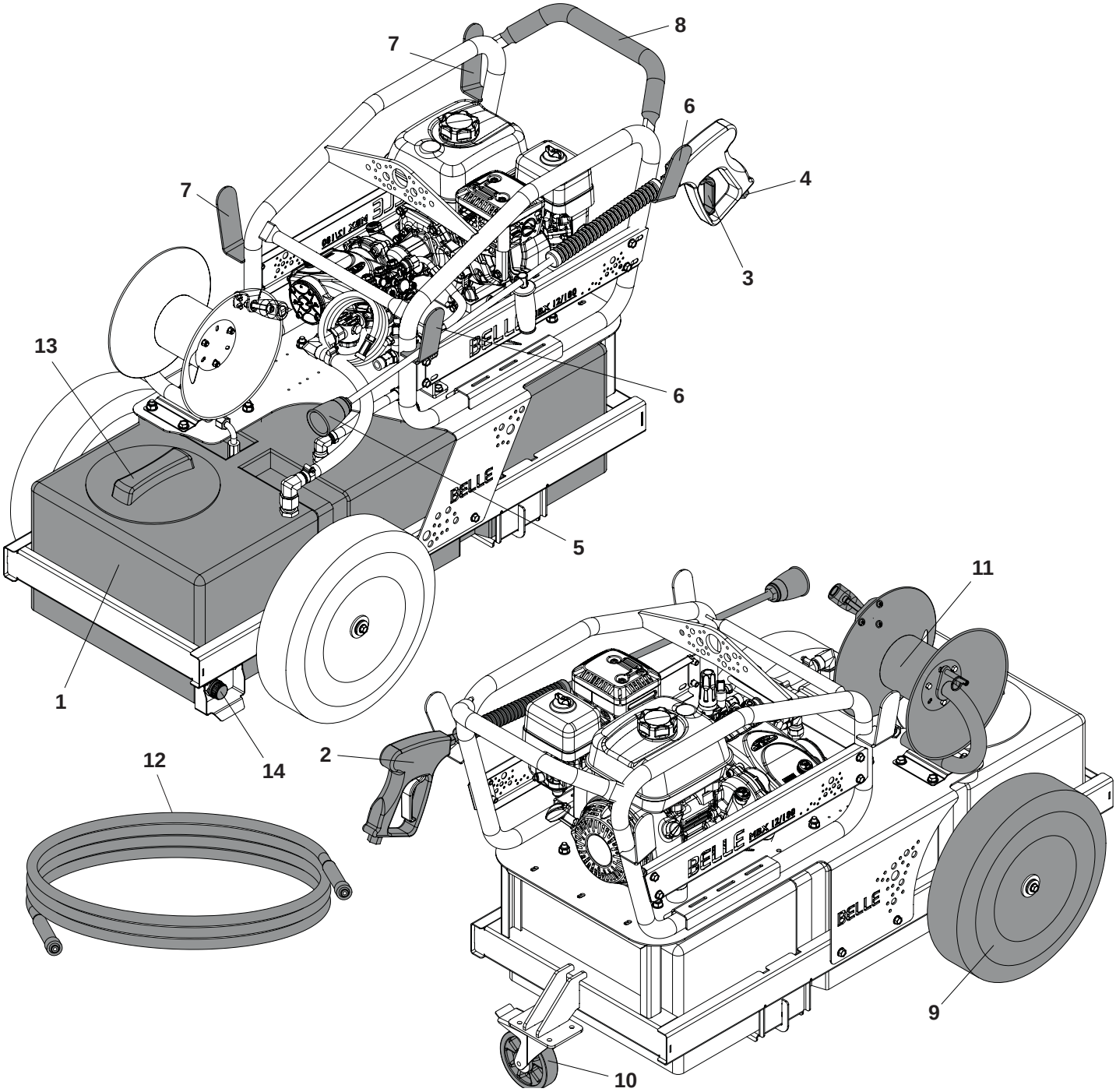

1. Water Tank.
2. Lance.
3. Lance Trigger.
4. Lance Swivel Joint.
5. Detergent Control Handle.
6. Lance Holder.
7. Hose Holder.
8. Transport Handle.
9. Wheel.
10. Braked Swivel Castor.
11. Optional 10m Hose Reel Kit.
12. High Pressure Hose.
13. Water Tank Fill Point / Strainer.
14. Water Tank Drain Point.

PRESSURE WASHER COMPONENT LOCATIONS - MBX 12/180

The diagram below shows a version of the Honda petrol driven MBX 12/180.

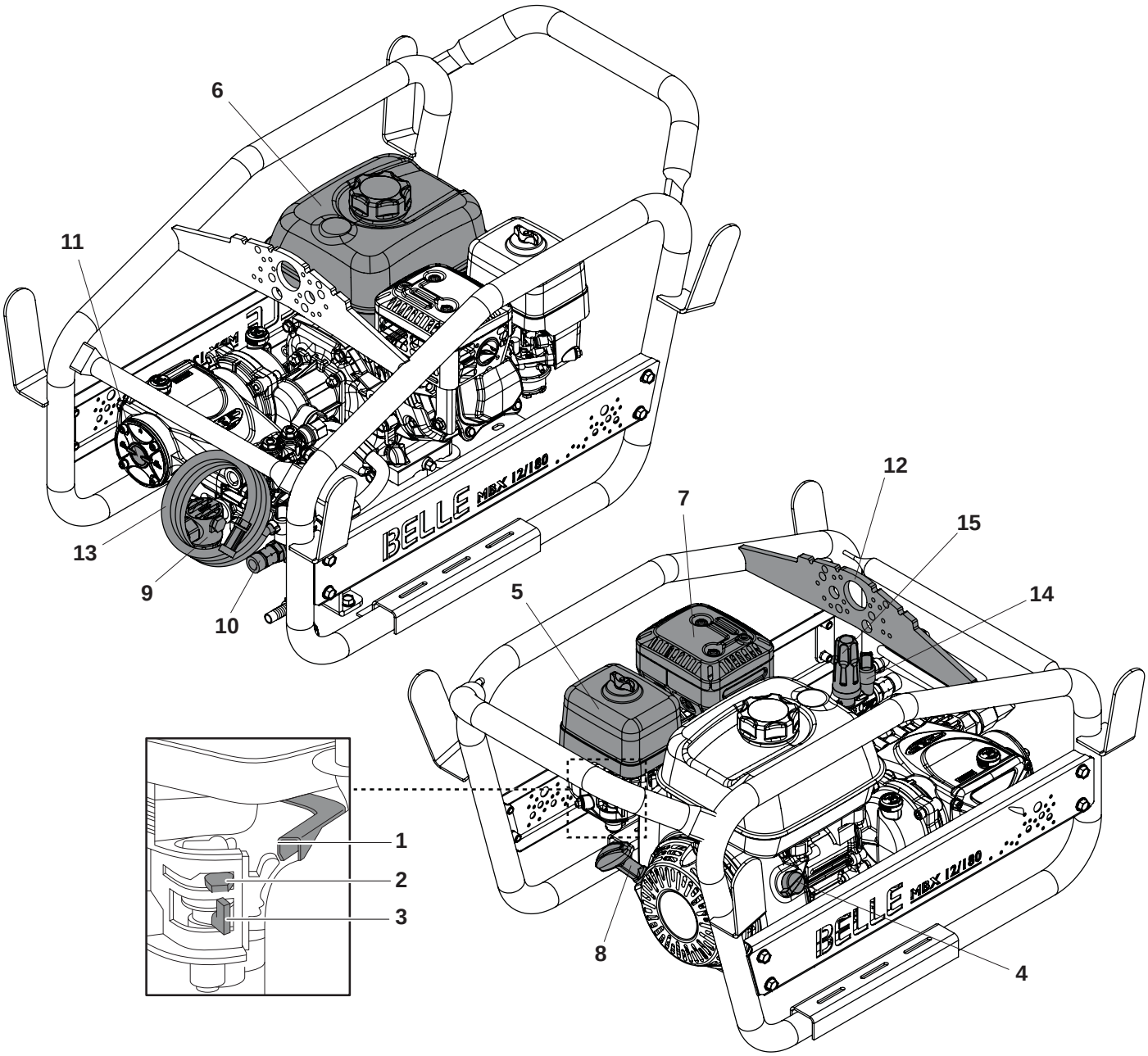

1. Throttle Lever.
2. Choke Lever.
3. Fuel ON / OFF Lever.
4. Engine ON / OFF Switch.
5. Air Filter Housing.
6. Fuel Tank.
7. Exhaust.
8. Recoil Starter Handle.
9. Pump Inlet Filter.
10. High Pressure Outlet
    (Non-Hose Reel versions only)
11. Pump Oil Level Sight Glass
12. Lifting Point
13. Detergent Inlet/Strainer
14. Detergent Control Valve.
15. Pressure Control Regulator.

PRESSURE WASHER COMPONENT LOCATIONS - MBX 08/120E+

The diagram below shows a version of the battery powered MBX 08/120E+

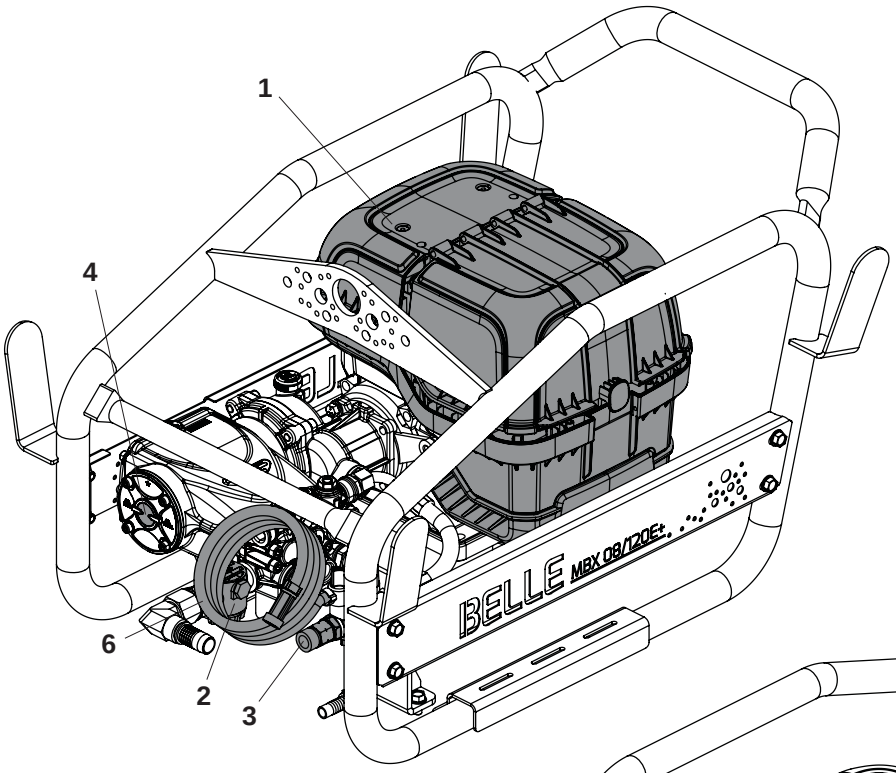

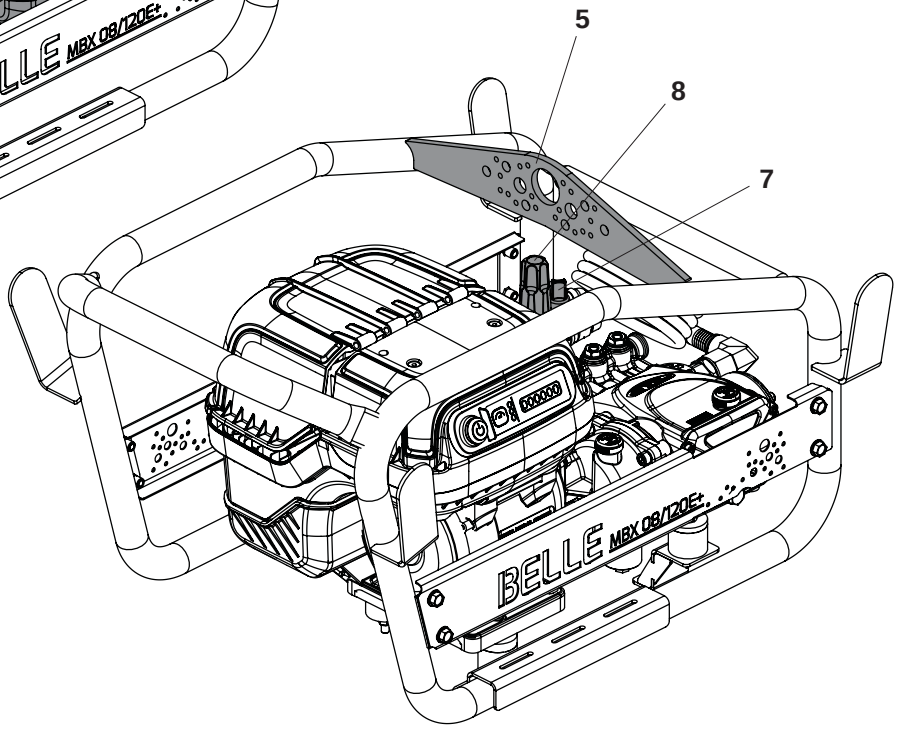

1. Power Unit.
2. Pump Inlet Filter.
3. High Pressure Outlet
   (Non-Hose Reel versions only)
4. Pump Oil Level Sight Glass
5. Lifting Point
6. Detergent Inlet/Strainer
7. Detergent Control Valve.
8. Pressure Control Regulator.

Machine Description

POWER UNIT COMPONENTS

A. ON / OFF Button.
B. Battery.
C. Battery Compartment Lid.
D. Battery Level Indicator.
E. Battery Presence Indicator.
F. Speed Adjust Button.
G. Speed Level Indicator.
H. Serial Label.

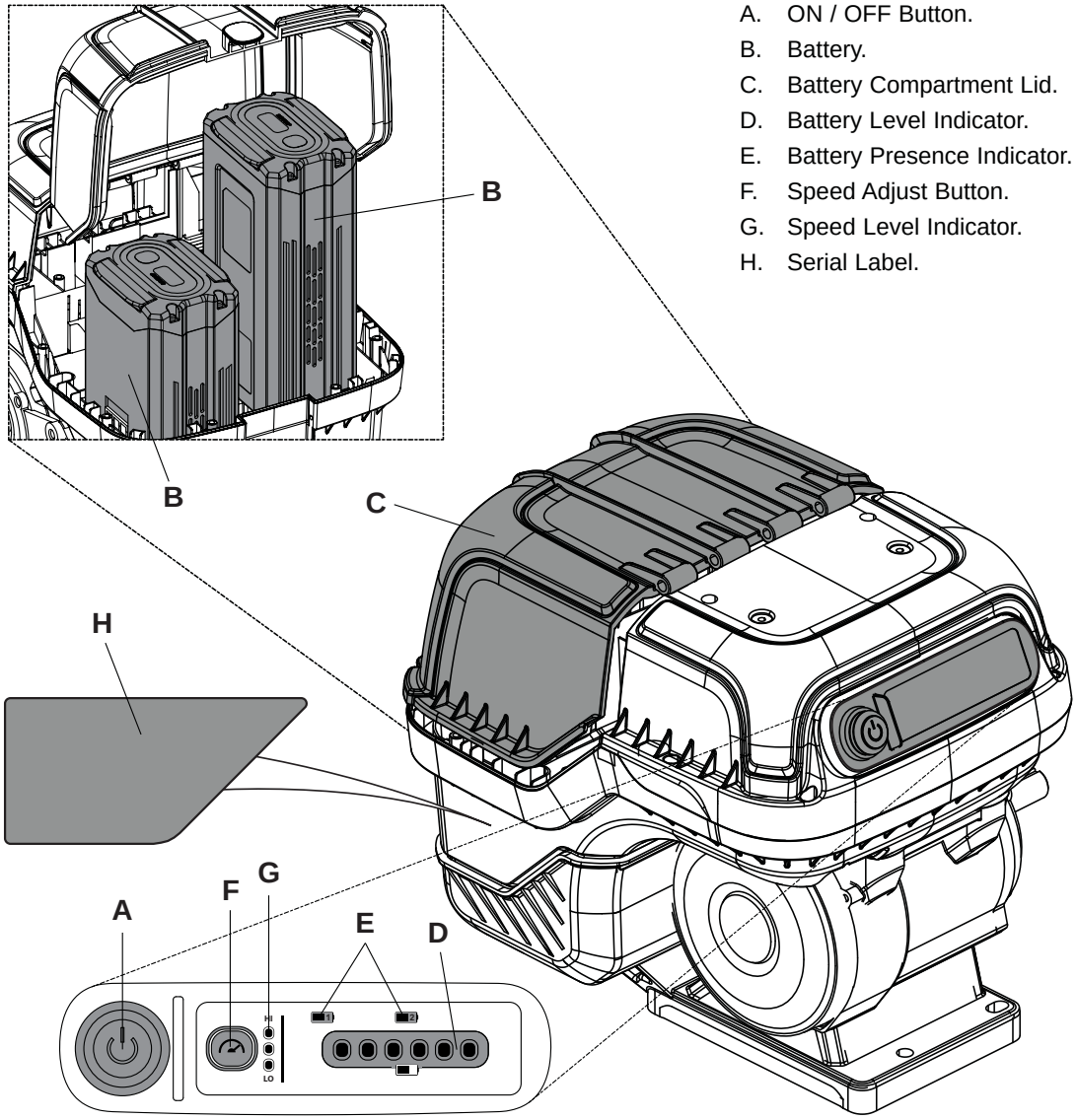

BATTERY PACK COMPONENTS

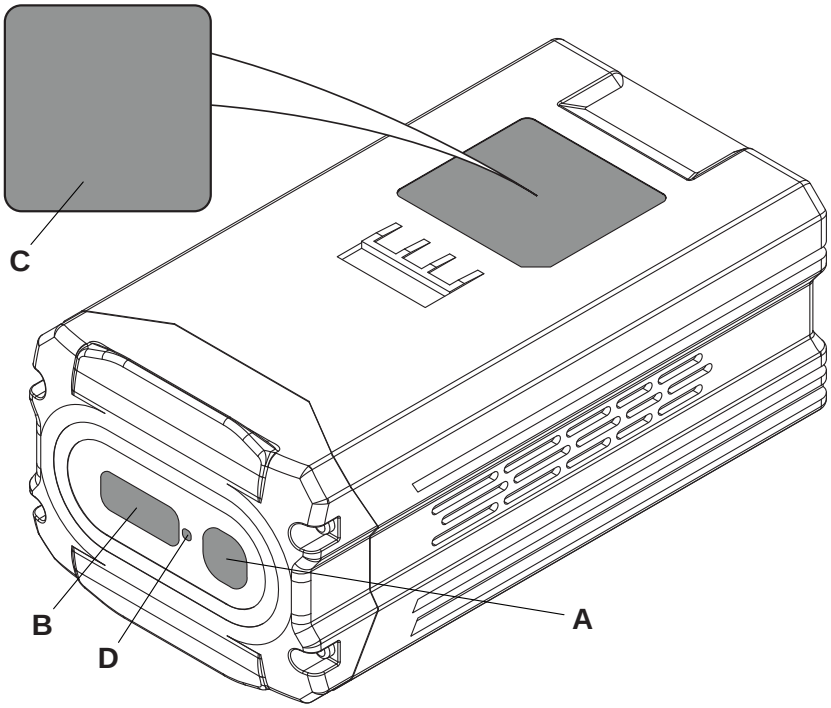

A. Battery Charge Level Button.
B. Battery Charge Level Display.
C. Serial Label.
D. Battery Caution / Over Temperature Indicator

BATTERY CHARGER

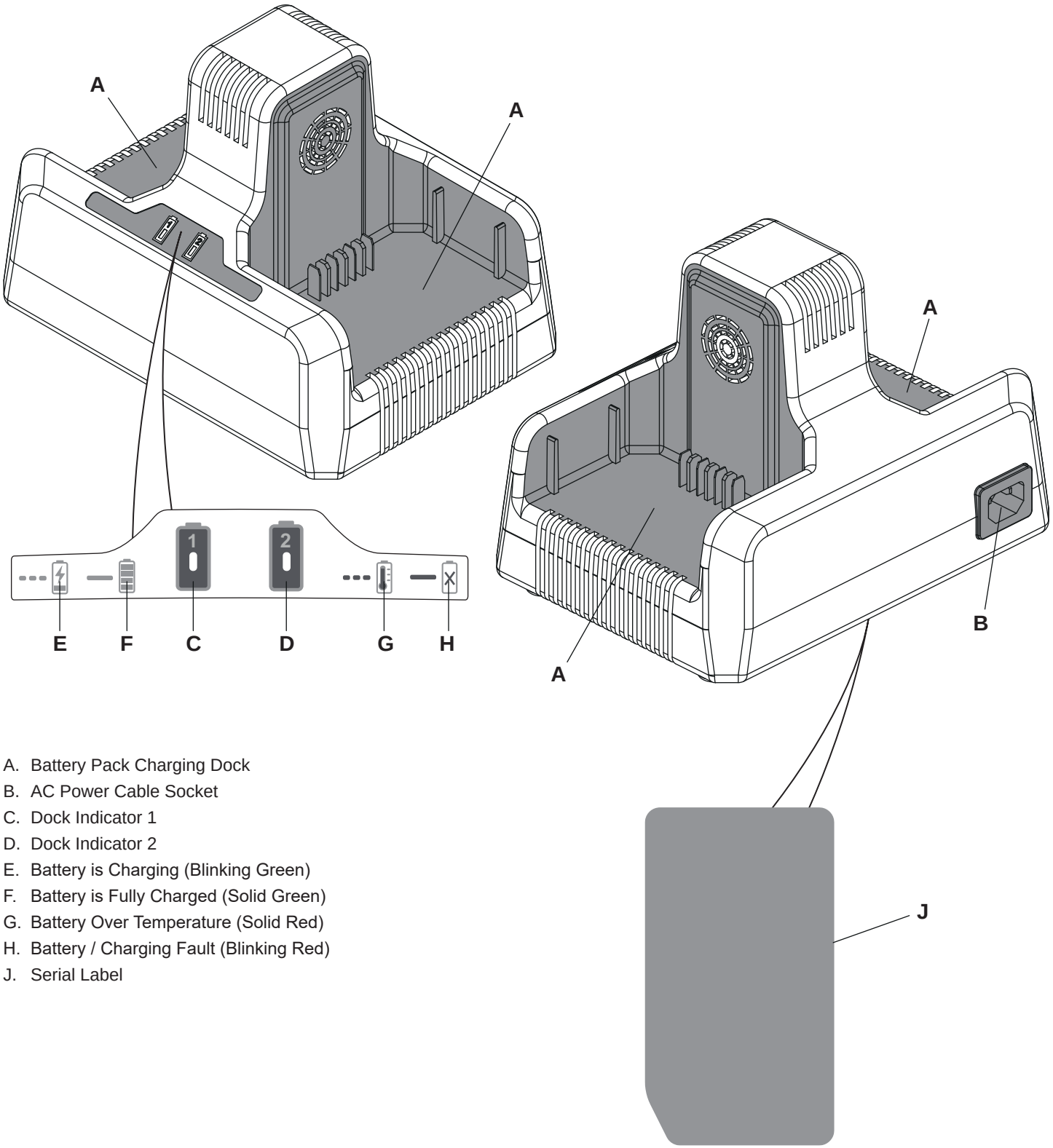

A. Battery Pack Charging Dock
B. AC Power Cable Socket
C. Dock Indicator 1
D. Dock Indicator 2
E. Battery is Charging (Blinking Green)
F. Battery is Fully Charged (Solid Green)
G. Battery Over Temperature (Solid Red)
H. Battery / Charging Fault (Blinking Red)
J. Serial Label

Technical Data

STATIC DIMENSIONS

The diagram below shows a version of the Honda petrol driven MBX 12/180.

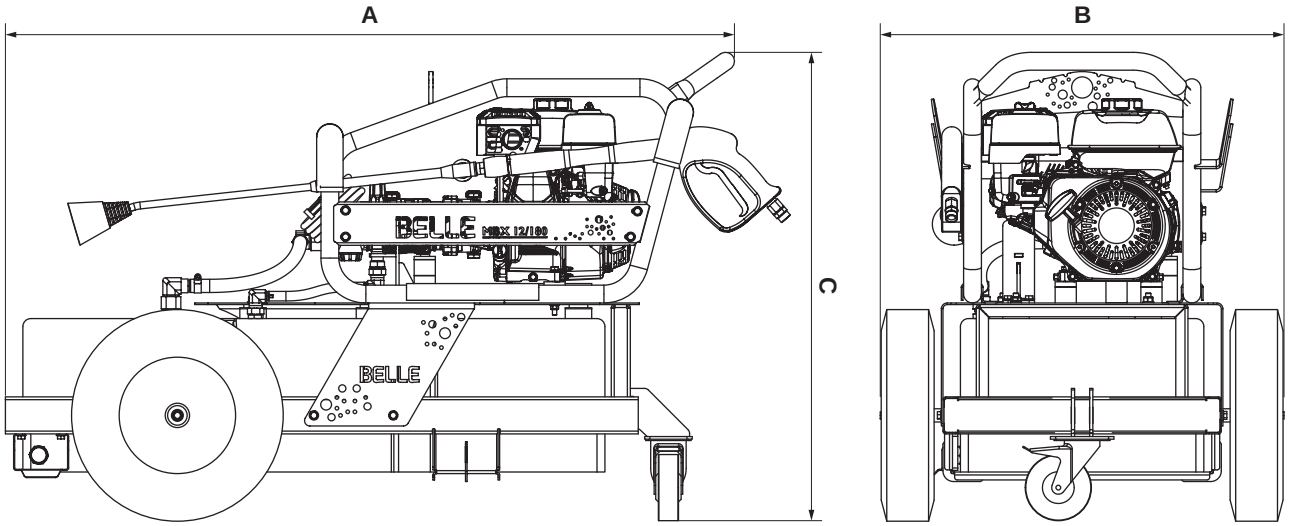

Model	MBX 12/180 & MBX 08/120E+
A - Length (mm)	1378
B - Width (mm)	760
C - Height (mm)	885

GENERAL DATA

Model	MBX 12/180	MBX 12/180 with Hose Reel	MBX 08/120E+	MBX 08/120E+ with Hose Reel
Unladen Weight (Kg)	*91	**100	*82	**92
Max. Laden Weight (Kg)	#223.5	##227	#214	##218
Water Tank Capacity (Ltrs)	125	125	125	125
Power Unit	Honda GX200	Honda GX200	Cramer E-GEN82	Cramer E-GEN82
Power Unit RPM / Power (Hp - kW)	3400 / 5.8 - 4.3	3400 / 5.8 - 4.3	3600 / 3.9 - 2.9 3200 / 3.4 - 2.5 2800 / 3.0 - 2.2	3600 / 3.9 - 2.9 3200 / 3.4 - 2.5 2800 / 3.0 - 2.2
Water Flow (lpm)	12	12	8	8
Max. Water Pressure (bar - psi)	180 - 2600	180 - 2600	120 - 1740	120 - 1740
Fuel Tank Capacity (Ltrs)	3.1	3.1	N/A	N/A
Hose Length (mm)	10	10	10	10
Hose Reel	No	Yes	No	Yes
Tyre Size (mm)	400-8	400-8	400-8	400-8
Tyre Pressure (psi - bar)	30 - 2.1	30 - 2.1	30 - 2.1	30 - 2.1
Gearbox Driven Pump	Yes	Yes	Yes	Yes
Sound Power Level (dB L_{WA})	108	108	-	-

GENERAL SAFETY

For your own personal protection and for the safety of those around you, please read and ensure you fully understand the following safety information. It is the responsibility of the operator to ensure that he/she fully understands how to operate this equipment safely. If you are unsure about the safe and correct use of the dumper, consult your supervisor or Altrad Belle.

WARNING *Improper maintenance can be hazardous. Read and Understand this section before you perform any maintenance, service or repairs.*

This machine is designed to eliminate the possible risks arising from the use of it. However, risks **DO** reside, and these residual risks are not clearly recognizable, and may cause personal injury or property damage, and possible death. If such unpredictable and unrecognizable risks become apparent, the machine must be stopped immediately, and operator or his supervisor must take appropriate measure to eliminate such risks. It is sometimes necessary that the manufacturer must be informed of such event for future counter measuring.

ALWAYS keep the Operator's Manual and any other manuals that accompany this machine to hand. Immediately replace any manuals that may have been lost or are now illegible.

PRE-START CHECKS

The following Pre-start-up inspection must be performed before the start of each work session or after every four hours of use, whichever is first. Please refer to the service section for detailed guidance. If any fault is discovered, the dumper must not be used until the fault is rectified.

- Place the Pressure Washer on firm level ground with the engine switched OFF.
- Thoroughly inspect the pressure washer for signs of damage. Check components are present and secure.
- **CHECK** fluid lines, hoses, filler openings, drain plugs and any other areas for signs of leakage. Fix any leaks before operating.
- **CHECK** the engine oil level and top up as necessary *(petrol model only)*.
- **CHECK** the engine fuel level and top up as necessary *(petrol model only)*.
- **CHECK** for engine fuel and oil leaks *(petrol model only)*.
- **DO** replace any worn/damaged warning decals.
- **ENSURE** the battery pack(s) is securely inserted into the power unit *(battery model only)*.
- **ENSURE** the battery pack(s) is sufficiently charged *(battery model only)*.
- **DO NOT** use the battery if it shows signs of damage/ wear or if it is leaking fluid. In this case place the battery in a secure location away from flammable materials and arrange for safe disposal *(battery model only)*
- Check that all tyres are inflated correctly. Check for penetration by any sharp objects / damage.
- Ensure any access panels are closed closed correctly and locked if possible.
  Your Altrad Belle Pressure Washer comes preset and NO adjustment is necessary.
- Be aware of how to stop the Pressure Washer by use of the On/Off switch or throttle lever.
- Refer to the engine / power unit and pump manuals provided for full pre-operation check.

Once all the above checks have been made, test run the machine checking that all switches function correctly and all indicators light when the power unit is turned on.

WORKSITES

- Ensure the operator is familiar with the working surroundings. Worksites can be hazardous.
- Cordon off the work area and keep members of the public and unauthorized personnel at a safe distance.
- **DO NOT** operate the pressure washer in confined spaces without adequate venitilation. Exhaust fumes can kill!!
- Water can alter the condition of the worksite surface area. **ALWAYS** be aware of the condition of the surface before and during operation.
- **ENSURE** all local regulations which affect the pressure washer are adhered to.

Safety Instructions

PRIOR TO OPERATING THE MACHINE

- **ENSURE** the operator has had adequate training prior to use, is familiar with all controls and knows how to safely switch the machine **OFF** before it is switched **ON** in case you get into difficulty.
- Suitable PPE must be worn when using this equipment and should meet relevant EEC/local standards: waterproof clothing / boots / gloves, safety goggles, helmet or helmet & visor and ear defenders. Tie back long hair and remove any jewellery which may catch in the equipment's moving parts.
- Become familiar with the controls before operating the pressure washer and make sure you know how to safely switch this machine **OFF** before you switch it **ON** in case you get into difficulty.
- Never remove or tamper with any guards fitted, they are there for your protection. Always check guards for condition and security, if any are damaged or missing, **DO NOT USE THE PRESSURE WASHER** until the guard has been replaced or repaired.
- **DO NOT** operate the pressure washer when you are ill, feeling tired, or when under the influence of alcohol or drugs.
- **ALWAYS** ensure the water pressure is released before starting the engine. This can be done safely by depressing the lance trigger.
- **ALWAYS** ensure high-pressure hose is connected before starting the engine.
- Replace any worn/damaged decals.
- Remove all packaging material before operating.

OPERATING THE MACHINE

- During use the engine becomes very hot, allow the engine to cool before touching it *(petrol model only)*.
- **NEVER** leave the engine / power unit running and unattended.
- **DO NOT** operate the pressure washer in confined spaces without adequate venitilation. Exhaust fumes can kill!! *(petrol model only)*
- Check condition of the battery housing. Ensure that there is no residual moisture or water lying in the housing. If so remove this before inserting the battery *(battery model only)*.
- Check the battery terminals are in order and not bent, damaged or heavily corroded. If they are **DO NOT** use the pressure washer *(battery model only)*.
- Check for visible damage to the switch and housing. If damaged **DO NOT** operate the pressure washer and arrange for repair *(battery model only)*.
- Place the pressure washer at least 3 metres away from buildings and other equipment during operation.
- High pressure jets can be dangerous if misused. The lance must not be aimed at persons, animals, live electrical equipment or the machine itself.
- **DO NOT** run the pump dry for more than 30 secs. This will cause internal damage.
- **DO NOT** leave engine / power unit running whilst not in use for long periods. This may cause damage to internal components.
- **DO NOT** use the pressure washer on any equipment that is connected to mains electrical supply. **ENSURE** all electrical components are covered and check for water ingress before reconnecting to the mains supply.
- **NEVER** disconnect a hose with pressure in it or allow a hose to be flattened / kinked.
- **ALWAYS** drain water from pump after operating in cold conditions to prevent frost damage.
- **DO NOT** use the Pressure Washer whilst positioned on a ladded. Use a suitable platform or scaffolding.
- **DO NOT** use the battery charger outdoors *(battery model only)*.
- **DO** only use the approved batteries to operate this machine *(battery model only).*
- **DO** only use the approved chargers to charge the batteries for this machine *(battery model only).*
- **DO NOT** expose the motor power unit to excessive amounts of water or pressurised jets of water *(battery model only).*
- **DO** always close the protective covers on the machine when in operation or stored outside.
- **DO NOT** obstruct any ventilation holes or vents
- **DO** keep batteries away from other metal objects when storing or transporting them. Keys, tools, nails, screws and other small metal objects could cause a short circuit between the battery terminals. This could result in burns, fire or battery damage *(battery model only).*

FUEL SAFETY *(petrol model only)*

- Before refuelling, switch off the engine and allow it to cool.
- When refuelling, **DO NOT** smoke or allow naked flames in the area.
- Spilt fuel must be made safe immediately, by using sand. If fuel is spilt on your clothes, change them.
- Store diesel in an approved, purpose made container away from heat and ignition sources.
- If fuel is spilt when re-fuelling the tank, wipe off the excess and wait 2 minutes before re-starting.

OIL AND LUBRICANTS *(petrol model only)*

- When handling oil, grease and other chemical substances observe the product-related safety regulations (safety data sheet)
- If any oil or lubricants are swallowed **DO NOT** make the person vomit and seek medical attention as soon as possible.
- If the oil or lubricants comes into contact with skin or eyes, flush with lots of water for at least 15 minutes. Seek medical advice.
- Use a suitable container to collect fluids and lubricants as they flow out and dispose of them in an environmentally friendly manner
- **ALWAYS** store oil and lubricants in secure labelled containers.

BATTERY CHARGER *(battery model only)*

- To reduce the risk of injury, **ONLY** charge Cramer 82v BAB733, BAB735 & BAB737 type rechargeable batteries. Other types of batteries may burst causing personal injury and damage.
- This Battery Charger is not intended for use by children or persons with physical, sensory or mental limitations or a lack of experience or knowledge. **DO NOT** allow children to play with this Battery Charger - **IT IS NOT A TOY!**
- Charge only Li-ion Battery Packs that do not exceed a capacity of 8AH 82v. The battery voltage must match the battery charging voltage of the Battery Charger. **DO NOT** charge non-rechargeable Battery Packs, otherwise there is danger of fire and explosion.
- Continued use of the Battery Charger under unusual conditions could result in fire or electric shock, which may kill or seriously hurt you.
- **DO NOT** modify the Battery Charger. Modifying, disassembling or repairing the Battery Charger could result in fire or electric shock, which can cause death or serious injury. Disassembly and repairs require specialised knowledge, contact your servicing dealer.
- Before using the Battery Charger / charging a Battery Pack, people who are using an electronic medical devices must confirm how their device might be affected. The electromagnetic radiation produced during charging may affect the operation of electronic medical devices, which may kill or seriously hurt you.
- If the Battery Pack leaks fluid or smells strangely, stop using it and concact your servicing dealer. Battery Pack contains combustible organic solvents as an electrolyte solution. Mistakenly handling them may result in burns or serious injuries (See Safety Data Sheet).

DO NOT use the Battery Charger in the following situations.
- Locations where the Battery Charger becomes unstable.
- Locations where there is flammable gas or combustible materials
- Locations that are very cold or very hot, such as in direct sunlight or near a heater
- Locations exposed to water or excessive humidity
- Locations where children or pets might play with it

ALWAYS follow the rules below.
- **DO NOT** charge Battery Packs if there is the risk of a lightning storm.
- **DO NOT** charge if the electric outlet is loose.
- **DO NOT** charge if the Battery Charger, AC cable, or the electric outlet is damaged or deformed, dusty, dirty, or rusty.
- **DO NOT** plug too many power cords into one electric outlet.
- **DO NOT** charge while the AC cable is wound up.
- **DO NOT** stand on or place heavy objects on the Battery Charger or AC cable.
- **DO NOT** pull or repeatedly bend the AC cable or charging cable with an excessive force.
- **DO NOT** touch the Battery Charger or AC cable if your hands are wet.
- **DO NOT** splash or submerge the Battery Charger or AC cable in water.
  – If the Battery Charger or AC cable is submerged in water while you are charging, do not touch the Battery Charger or AC cable. Contact your servicing dealer.
- **DO NOT** leave the AC plug plugged into the electric outlet after you finish charging.
- **DO NOT** pull on the cable when you pull out the AC plug.
- **DO NOT** subject the Battery Charger to excessive physical shock, such as by dropping or hitting it.
- **DO NOT** use the Battery Charger to charge anything except authentic Battery Packs. Charging a non-authentic Battery Pack could damage it and the charger because of poor protection functions, etc.
- **DO NOT** touch the Battery Pack terminals with metal. Mishandling them could result in electric shock or fire, which may kill or seriously hurt you. Follow the procedures and instructions provided in the manufacturers manual.

BATTERY PACK *(battery model only)*

- **ALWAYS** use a genuine battery pack that is intended for this machine.
- **DO NOT** disassemble the battery pack.
- **DO NOT** touch the Battery Pack's connectors with metal objects or insert metal objects through openings into the Battery Pack.
- **ALWAYS** keep the battery pack clean and dry.
- **NEVER** allow the battery pack to come into contact with water.
- If the Battery Pack leaks fluid or smells strangely, **IMMEDIATELY** move it away from any heat sources or flame. There is a risk of fire or rupturing if the leaked liquid or gas ignites.
- The Battery Pack contains combustible organic solvents as an electrolyte solution. If the liquid gets into your eyes, rinse them with plenty of water. After that, **IMMEDIATELY** seek medical care. (See Safety Data Sheet).
- **DO NOT** allow children to use the Battery Pack. Store the Battery Pack out of the reach of children.
- **DO NOT** store the Battery Pack in a damp location. Doing so can cause a malfunction.
- When the Battery Pack is not in use, keep it away from other metal objects, like paper clips, coins, keys, nails, screws or other small metal objects, that can make a connection from one terminal to another. Shorting the battery terminals together may cause burns or a fire.
- In case of fire, **STOP** using the machine immediately and extinguish with dry chemical, sandy soil, carbon dioxide or appropriate foam.
- The Battery Pack will deteriorate if it is repeatedly charged and discharged, as well as if it is stored and not used.
- As the Battery Pack deteriorates, its full-charge capacity decreases and the length of time it can be used shortens. Once the full-charge capacity is reduced by deterioration, it cannot be recovered and cannot reach the charging capacity of a new Battery Pack.

BATTERY PACK cont. *(battery model only)*

- **ALWAYS** remove the battery pack from the power unit when transporting or maintaining it.
- **ONLY** charge the battery pack in a recommended charging unit.
- **DO NOT** expose the battery pack to extreme temperatures (below -14°C (6.8°F) or above 40°C (104°F))
- **NEVER** attempt to service a damaged battery pack.
- **WORK ON THE BATTERY PACK OR POWER UNIT MUST ONLY BE CARRIED OUT BY SUITABLY COMPETENT & QUALIFIED PERSONNEL**

TYRE SAFETY

- Check tyre pressure regularly (at least once a month).
- Inspect tyres for uneven wear patterns on the tread, cracks, foreign objects, or other signs of wear or trauma.
- Remove bits of glass and foreign objects wedged in the tread.
- Make sure your tyre valves have valve caps.

TRANSPORTATION

- This equipment is heavy and **MUST NOT** be lifted by hand. Where possible, please use the integrated wheels to transport the pressure washer otherwise use suitable lifting equipment on the lifting point.
- Always switch **OFF** the engine / power unit before transporting, moving it around the site or servicing it.
- If transporting the pressure washer on a trailer bed, **ALWAYS** use the designated strapping hooks on the trailer bed and **ENSURE** the brake on the caster is applied.

DURING MAINTENANCE

- Carry out maintenance and repair work only if the pressure washer is positioned on stable and level ground.
- **NEVER** service the machine while the engine is running, always switch OFF.
- **ALWAYS** chock the wheels and **ENSURE** the caster brake is applied before starting any maintenance work.
- Clean the pressure, especially connections and threaded unions, of any traces of oil, fuel or preservatives before carrying out maintenance/repair. Never use aggressive detergents. Use lint-free cleaning rags.
- When handling oil, grease and other chemical substances, observe the product related safety regulations.

AFTER MAINTENANCE

- **ALWAYS** tighten any screwed connections that have been loosened during maintenance and repair.
- Any safety devices removed for set-up, maintenance or repair purposes must be refitted and checked immediately upon completion of the maintenance and repair work.
- **ENSURE** that all consumables and replaced parts are disposed of safely and with minimum environmental impact.

MODIFICATIONS & REPLACEMENT PARTS

- **NEVER** make any modifications or additions to the machine without the prior approval of Altrad Belle. Any unapproved modifications may affect the performance and safety of the machine. This may also voide the Warranty.
- **ALWAYS** use genuine Altrad Belle replacement parts. Use of non-genuine replacement parts may affect the performance and safety of the machine. This may also voide the Warranty.

Genuine Altrad Belle replacement parts can be purchased online at **www.Altrad-Belle247.com**

RISK ASSESSMENT

It is the responsibility of the operator to ensure that the pressure washer is used in a safe manner, taking into account all aspects of the worksite and working conditions on and around the worksite.

The following are given as a guide to be taken into account when the risk assesment is made. There may be others factors that need to taken into consideration also.

OPERATOR

- Is the operator of the pressure washer suffiently trained with competant knowledge of all controls?
- Is the operator fit and physically able to operate the pressure washer? An operator who is sick, tired or under the influence of alcohol or drugs is a dangerous operator.

WORKSITE

- Are the any steep gradients or precipices that need to be avoided?
- Is the ground solid and stable enough to operate the pressure washer?
- Are the any obstacles or hazards in the area that need to taken into consideration? Eg. Power cables, barriers, man-hole covers, excavations?
- Are members of the public and unauthorised personnel cordoned off from the area the pressure washer is operating?

PRESSURE WASHER

- Is the pressure washer in a suitable working condition?
- Have the pre-start checks listed in this manual being carried out, and any indentified faults been rectified?

SAFETY DECALS

The diagram below shows a version of the Honda petrol driven MBX 12/180.

A. Branding Decals.
B. Operating Safety Decal.
C. Operating Decal.
D. Tyre Pressure Decal.
E. Lifting Safety Decal.
F. Lifting Point Decal.
G. Engine ON/OFF Decal *(petrol model only).*
H. Noise Decal.
J. Safety Decal.

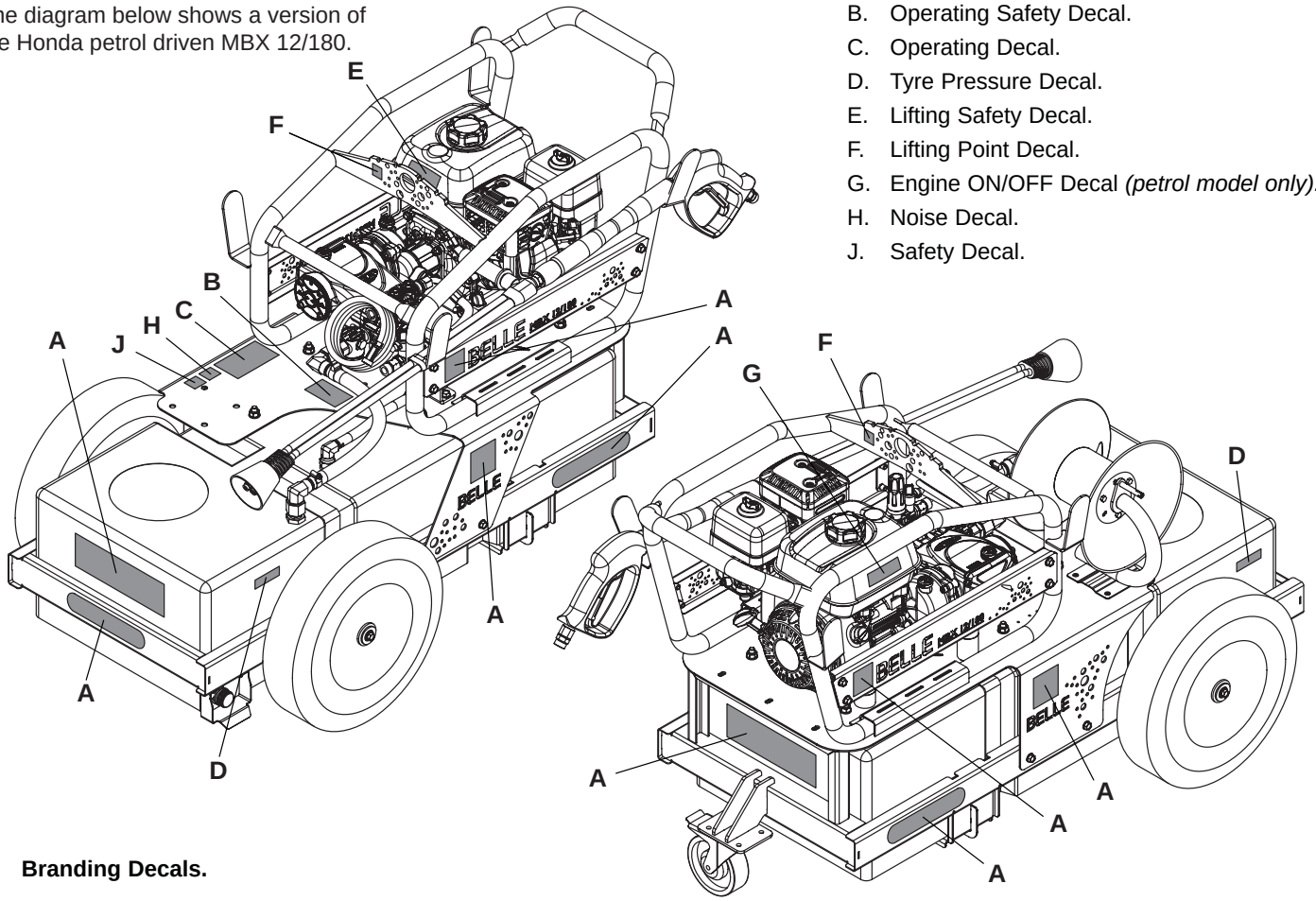

A. Branding Decals.

B. Operating Safety Decal.
Highlights important safety information that must be read before operating the machine.

C. Operating Decal.
Information on how to safely start the Bowser Pressure Washer.

D. Tyre Pressure Decal.
Indicates the recommended tyre pressure.

E. Lifting Safety Decal.
DO NOT lift the Bowser when there is water in the tank.

F. Lifting Point Decal.
Indicates the Lifting Points on the frame.

G. Engine ON/OFF Decal.
Indicates the position of the On/Off Switch on the engine.

H. Noise Decal.
Indicates the noise level emitted from the machine.

J. Safety Decal.

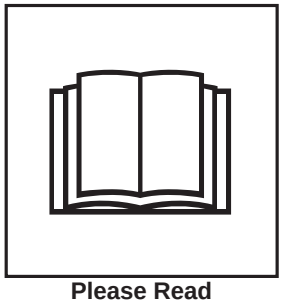
Please Read Operators Manual

Wear Protective Footwear

Wear Ear Protection

Wear Eye Protection

Refer to the Machine Description section to identify all components mentioned in this section.

WARNING *Before you operate or carry out any maintenance on this machine **YOU MUST READ** and **STUDY** this manual.*

PRE-OPERATION
- Check your Pressure Washer before use and **IMMEDIATELY** replace any damaged parts.
- Place the Pressure Washer on firm level ground with the engine / power unit switched **OFF**.
- Check the engine oil level, low oil levels will result in the engine not starting *(battery model only)*.
- Check the fuel level *(battery model only)*.

- This equipment is could emit a Sound Power Level (LWA) of up to ??dB(A). See Technical Data section for more details and wear appropriate ear defenders.
- Your Altrad Belle Pressure Washer comes preset and **NO** adjustment is necessary.
- Be aware of how to stop the Pressure Washer by use of the On/Off switch or throttle lever.

Refer to the engine / power unit and pump manuals provided for full pre-operation check.

HOSE CONNECTION - HIGH PRESSURE OUTLET (MACHINE MUST BE TURNED OFF)
- Ensure in-line filters are in good condition and not removed.
- Check condition of the o-rings in the ends of the hose.
- Attach the high pressure hose to the pump connection.
- Attach the lance to opposite ends of the high pressure hose.

CHARGING THE BATTERY PACK *(battery model only)*

CAUTION *The battery pack is not shipped fully charged. It is recommended to fully charge before use to ensure that maximum run time can be achieved.*

- Only charge compatible batteries with the charger.

NOTE: ALWAYS allow the battery to complete 5 charge cycles (A cycle is defined as 100% - 0% - 100%) to enable the battery to reach is optimum capacity

1. Plug the power lead into the charger body.
2. Connect the power lead plug into a suitable rated mains power supply socket.

NOTE: This charger should only be used on 230v AC 50/60Hz supply with a minimum load current of 10A

3. Use the battery charger indoors only and away from any damp environments.
4. Place the charger on a flat surface and do not obstruct any ventilation slots.
5. **DO NOT** use the charger in any explosive atmospheres and keep away from combustible powders, water sprays or metallic dust or shavings.
6. Slide the battery into the slot of the charger ensuring that the battery contacts are aligned with the charging connection blades.
7. Gently push the battery firmly into the charger slot.
8. Switch the power outlet on.
9. Check the indicator LED *(C or D)*. The approved charger is a diagnostic charger. The charger LED light will illuminate in specific order to communicate the current battery status. They are as follows:-
   Flashing Green = Charging *(Leave battery on the charger until LED shows solid Green)*
   Solid Green = Battery fully charged *(Battery charged, remove battery from charger)*
   Solid Red = Battery over temperature *[Battery caution logo] (Leave the battery on the charger for up to 30mins until the LED flashes Green)*
   Flashing Red = Battery charging fault *(Remove battery and dispose of correctly)*
10. The battery will only start charging if the charge level is below 69%.

- See also the manufacturers instruction card supplied with the charger.

INSERTING THE BATTERY PACK INTO THE POWER UNIT *(battery model only)*

1. Select a compatible battery and check that it is in good operational condition. If the battery shows signs of impact damage, emits an unusual smell, feels hot **DO NOT USE**
2. Check the charge value by pressing the 'charge indicator' button. If the battery charge is sufficient then proceed to insert the battery into the motor housing.
3. Unclip and open the battery housing cover.
4. Hold the battery with 2 hands. One hand should grab the battery from the top with the charge display facing upwards, gripping it across the 2 short sides. The second hand should hold the battery around the middle.
5. Turn the battery until the retaining lug lines up with the battery retaining clip.
6. Slide the base of the battery into its housing locating the slide rails.
7. Remove your hand from the middle keeping hold of the battery from the top and allow the battery to slide fully into the housing.
8. Once fully inserted, press lightly down on the top of the battery until the battery retaining latch, clicks into position and locks the battery in place.
9. Check that the battery isolator key is fitted.
10. Close the battery housing cover.
11. The drive unit is now ready for operation.

STOPPING THE POWER UNIT *(battery model only)*

1. Press the silver **START/STOP** button on the side of the power unit and the power unit will stop.

STARTING THE POWER UNIT *(battery model only)*

1. Press the silver **START/STOP** button on the side of the power unit and the power unit will start.

ADJUSTING THE SPEED *(battery model only)*

The power unit has 3 speed settings - 3600, 3200 & 2800rpm. When you turn on the power unit, the speed start at the same speed as it was when it was last turned off. To adjust the speed:-

1. Press the speed adjust button once to adjust the speed from low to medium to high. When the speed is set at 3600rpm, pressing the speed adjust button will adjust the speed to 2800rpm.

CAUTION *The max. engine running speed is pre-set by the manufacturer and must not be adjusted.*

STOPPING THE ENGINE *(petrol model only)*

1. Switch **OFF** the loads.
2. Switch **OFF** the engine.
3. Turn the fuel tap to the **CLOSED** position.

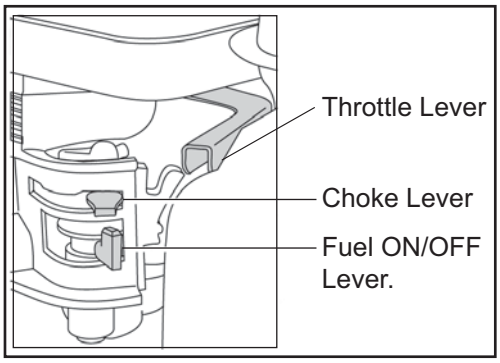

STARTING THE ENGINE *(petrol model only)*

1. Remove all objects placed on, or within one metre of the Pressure Washer.
2. Open the fuel tap by moving the fuel **ON / OFF** lever fully to the right.
3. If starting the engine from cold, set the choke **ON** by moving the choke lever fully to the left. If restarting a warm engine, the choke is usually not required, however, if the engine has cooled to a degree, partial choke may be required.
4. Turn the engine **ON / OFF** switch clockwise to the **'I'** position.
5. Set the throttle to the idle position by moving the throttle lever fully to the right.
6. Taking a firm hold of the frame with one hand, grasp the recoil starter handle with the other. Pull the recoil starter until engine resistance is felt, then let starter return.
7. Taking care not to pull the starter's rope fully out, pull the starter handle briskly.
8. Repeat until the engine fires.
9. Once the engine fires gradually set the choke lever to the **OFF** position by moving it to the right.
10. If the engine fails to fire after several attempts, follow the Troubleshooting Guide.
11. To stop the engine, set the throttle to idle and turn the engine **ON / OFF** switch anticlockwise to the **'0'** position.
12. Turn the fuel **OFF**

OPERATING THE MACHINE

- Start the engine / power unit (see start and stop procedure)
- Aim the lance at the area being cleaned and press the lance trigger.
- Adjust the pressure regulator to obtain required working pressure. **ALWAYS** use on full throttle.

CAUTION *The high pressure of water may cause the lance to jolt. Ensure you have a good grip of the lance before operating the pressure washer.*

- On completion of the job, stop the engine / power unit (see start and stop procedure)
- Press the lance trigger to release the pressure within the lance.

CAUTION *Always drain water from pump after operating in cold conditions to prevent frost damage.*

When Using Detergents

- Set the machine up as for using water.
- Connect the detergent hose to the machine and place the filter end into the detergent supply.
- Loosen detergent control valve.
- Loosen control handle to deliver detergent.

- On completion of the job, flush out the hose and lance with clean water to remove any residual detergent.
- Tighten detergent control valve.
- Tighten control handle.

When Using the Hose Reel

- Pull the securing pin in the side of the hose reel to release the reel. Unravel the hose to the desired length.
- Connect the hose to the lance.

- On completion of the job, remove the hose from the lance and reel the hose back in.

REMOVING THE BATTERY PACK FROM THE POWER UNIT *(battery model only)*

CAUTION ***ENSURE** the machine is switched **OFF** before removing the battery.*

1. Stop the drive unit using the **START/STOP** button.
2. Unclip and open the battery housing cover.
3. Push down lightly onto the top of the battery, at the same time press and release the battery retaining latch. Remove your hand from the top of the battery and it should rise slightly.
4. Then grip the top of the battery with one hand across the 2 short faces and lift slowly.
5. Once the battery slides halfway out of the housing grip the middle of the battery with the second hand.
6. Lift the battery from the battery housing.
7. If the battery needs to be charged then carefully move it to the battery charger.
8. If the battery is to be stored then place the battery in a dry place away from direct sunlight or excessive temperatures. It is recommended to store the battery at between +6°C to +40°C.
9. If the battery is to be transported it should be placed into protective packaging or storage (see local regulations for the transportation of Li-ion batteries)

NOTE: DO NOT transport the drive unit with a battery fitted. This could lead to the battery being damaged due to knocks & shocks, vibrations, or exposure to the weather and elements.

10. Leaving the battery fitted to the drive unit during transportation may also lead to the high value battery being stolen.
11. See also the manufacturers instruction card supplied with the charger.

CHECKING THE CHARGE LEVEL OF THE BATTERY PACK *(battery model only)*

Push the red battery charge level button (See adjacent image) on top of the battery whilst it is inserted into the power unit and the power level will show on the digital display in numerical format.

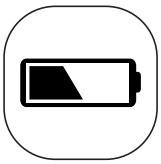

Storage

If the machine is not to be used for a long period of time it must be stored correctly to prevent deterioration or damage occuring during this period.

Store the machine in a clean dry building with plenty of ventilation if possible. If you can only store outdoors, cover with a waterproof sheet / tarpaulin.

PREPARING THE MACHINE FOR STORAGE

1. Clean the machine and remove all unwanted material / debris.
2. Dry the machine to remove any moisture.
3. Apply grease to any moving parts / grease points.
4. Examine the machine for any worn / damaged parts. Replace if necessary.

STORING THE MACHINE

1. Place the machine safely on stable, level ground. **ENSURE** there is sufficient room around the machine to be able to carry out any service or maintenance procedures during the storage period.
2. **ENSURE** the battery pack is removed and and stored in a clean, dry area *(battery model only)*.
3. **ENSURE** the isolator key is removed from the power unit *(battery model only)*.

DURING STORAGE

To prevent the build up of rust and to minimise the risk of seizures, periodically operate all machine functions during storage.

1. Install a fully charged battery *(battery model only)*.
2. Insert the isolator key *(battery model only)*.
2. Start the engine / power unit.
3. Operate the machine to **ENSURE** it operates correctly.
4. Re-do storage procedure from above.

REMOVING THE MACHINE FROM STORAGE

1. Install a fully charged battery *(battery model only)*.
2. Carry out the Pre-Start Check procedure
3. Operate the machine as per the operating instructions in this manual.

GENERAL

This machine is designed to give many years of trouble free operation. It is, however, important that the simple regular maintenance listed in this section is carried out. All maintenance procedures must be carried out by a competant, suitably qualified person.

A poorly maintained machine could be a danger to the operator and the other personnel on the worksite. **ENSURE** that the regular maintenance procedures listed in this manual are performed correctly and on time to keep the machine safe and efficient.

ALWAYS use genuine Altrad Belle replacement parts, the use of spurious parts may void your warranty.

Before any maintenance is carried out on the machine, switch off the machine and **ALWAYS** set the machine on stable, level ground.

ENSURE any faults identified during maintenance proceudres are addressed and corrected immediately.

WARNING *Before starting any maintenance or repairs, switch off the power unit and remove the battery/batteries. On completion of maintenance, check that the drive unit functions correctly and that all guards are correctly fitted.*

MAINTENANCE SCHEDULE

The following schedule details the attentions considered necessary to ensure satisfactory operation of the Mini Bowser Pressure Washer.

NOTE:- The attentions and periods summarised in the schedule are the initial recommendations and should be revised to suit the Power Unit working conditions. Only authorised dealers should repair the Bowser Pressure Washer, and within the requirements of the CE mark (where applicable), where no deviation from the original specification must take place.

Please refer to the power unit manufacturers instruction manual, before attempting any maintenance checks or procedures.

Item	Attention	Daily	6 Months / 500 Hours	Yearly / 1000 Hours
Engine	Check oil level and top up a required	✓		
	Check fuel level and top up a required	✓		
	Drain fuel tank and refill.		✓	
	Oil change	See relevant engine manual		
Hoses	Check connections for leaks or damage.	✓		
	Check condition for damage.	✓		
Pump	Check oil, drain and replace.		✓	
	Replace seals.			✓
Fuel Filter	Replace.		✓	
Water Filter	Clean.		✓	
High Pressure Nozzle	Replace.		✓	

Oil / Fuel Type & Quantity - Spark Plug Type

	Oil Type	Quantity (Litre)	Fuel Type	Capacity (Litre)	Spark Plug Type	Electrode Gap (mm)
Petrol Honda GX200	S.A.E. 10W 30	0.6	Unleaded	3.1	BM6ES or BPR6ES	0.7 - 0.8
Gearbox	ISO VG 220 or S.A.E. 8W 90	0.16	N/A	N/A	N/A	N/A
Pump Head	S.A.E. 15W 40	0.45	N/A	N/A	N/A	N/A

CLEANING

Keeping the machine clean is an integral part of the service and maintenance program. The build-up of mud, dirt and debris could potentially affect the operating safety of the machine, exposing both the operator and other personnel to potentially hazardous situations.

WARNING *__ENSURE__ the bowser pressure washer is stationary on stable, level ground and the engine / power unit is switched __OFF__ before carrying out the cleaning procedures.*

WARNING *__NEVER__ use a hose or pressure washer to spray water on the machine while cleaning it. Water entering the power unit components may cause a malfunction and/or injury.*

WARNING *When cleaning the bowser pressure washer __ENSURE__ that suitable PPE is worn at all times, especially when using solvents, detergents or volatile and easily flammable anticorrosion agents.*

The wrong choice of cleaning equipment and agents can also affect the operating safety of the *bowser pressure washer* and undermine the health of the persons in charge of cleaning the machine.

- Wipe off any external material. **ALWAYS** wipe the battery pack clean with a dry, clean cloth. Before cleaning the battery pack, remove it from the specified device or the battery charger.

- **DO NOT** use petrol, turpentine, lacquer or paint thinner, dry cleaning fluids or similar products.
- **NEVER** let any liquids near the power unit.

After the cleaning process check that all connections and fasteners are in place and secure. Replace any if necessary.
Also **ENSURE** that all safety / warning decals are present in their correct locations. Replace any if necessary.

DETERGENTS

NEVER use a full strength detergent.
ALWAYS dilute the detergents as recommended by the manufacturer, or the paint finish may be damaged.
ALWAYS follow cleaning detergent safety precautions.

After cleaning, examine all fuel, lubricant, and hydraulic fluid lines for leaks, loose connections, chafe marks and damage. Any defects found must be rectified without delay.

ENSURE local regulations are adhered to regarding the disposal of dirt / debris created from cleaning the bowser pressure washer.

PRESSURE WASHER OPERATION

Problem	Cause	Remedy
Sudden pressure loss.	No water supply.	Check supply & filters.
	No chemical supply.	Check chemical reservoir, close valve.
Low pressure.	High pressure nozzle worn	Replace high pressure nozzle.
	Unloader set incorrectly.	Set unloader to correct setting.
Low pressure, machine is noisy and vibrates.	Valves worn or blocked.	Clean / replace as required.
	Piston seals worn.	Replace.
	Pump sucking air.	Check water supply pipe and unions.
Pump will not by-pass.	Non-return valve dirty or jammed.	Clean or replace.
Water drips from pump box.	Pump seals worn.	Replace.
Pump oil drips from pump bottom.	Oil seal worn.	Replace.
Pump oil is cloudy.	Water ingress through oil filter plug.	Rinse pump out and replace oil
Water leaks occasionally from underneath the machine.	Pump seals worn.	Water in pump too hot. Release pressure by operating the lance.

HONDA ENGINE

Problem	Cause	Remedy
Machine stops suddenly or will not start.	Low oil.	Check and top-up oil.
	Low fuel.	Check and top-up fuel.

BATTERY POWER UNIT

Problem	Cause	Remedy
The power unit does not start.	The battery is not fully inserted.	Check the connection between the battery and the battery port. **ENSURE** the battery clicks into place.
	The battery is not charged.	Charge the battery.
	The Start/Stop button is faulty	*Fault find the switch and replace if necessary
	Battery may require service or replacement.	Replace the battery.
The power unit is excessivley noisy and vibrates.	The motor shaft is bent.	Stop the power unit and inspect for damage.
The machine stops during operation and an alarm can be heard.	The motor has been overloaded.	Press the Stop button and leave the drive unit to cool for 3-4 minutes. Then restart the drive unit by pressing the Start button.
	The battery is flat.	Recharge the battery as per the instructions in the manual.

Items marked with * should only be carried out by a competent electrician or Altrad-Belle dealer.

GB Troubleshooting Guide

BATTERY PACK & CHARGER

Problem	Cause	Remedy
Charging does not start.	The AC plug is not connected to an electric outlet.	Connect the AC plug to an electric outlet correctly.
	The charging connector is not connected to the battery connector.	Connect the charging connector to the battery connector correctly.
	Charger / battery may be too hot or too cold.	Move the charger and battery pack to a location where the ambient temparature is between 7°C and 40°C
WARNING! If problems persists, leave the battery on the charger for a minimum of 24 hours. This should resolve any issues. If problem still persists after this contact an authorised Altrad Belle dealer.		
Charging LED illuminates RED during charging.	Battery pack is too hot.	Remove the battery pack from the charger and allow to cool for at least 30 minutes. Re-insert battery pack once cool.
Charging LED flashes RED during charging.	Charging fault.	Remove the battery pack and unplug the charger. Wait 1 minute, plug the charger back in and re-insert the battery pack.
Charging LED still flashes RED during charging.	Faulty battery pack.	Replace battery pack. Dispose of faulty battery pack safely and correctly. See local guidance for advice on the safe disposal of Li-Ion batteries.

GB Environment

Safe Disposal.

Instructions for the protection of the environment. The machine contains valuable materials. Take the discarded apparatus and accessories to the relevant recycling facilities.

Component	Material
Frame	Steel
Water Tank	Polyethylene
Wheels	Rubber, Plastic & Steel
Castor	Rubber & Steel
Lance	Nylon, Stainless Steel & Brass
Engine *(if fitted)*	Aluminium
Pump	Steel, Aluminium & Brass
Flexible Mounts	Steel and Rubber
Power Unit *(if fitted)*	*See Below
Battery Pack	*See Below
Battery Charger	*See Below
Various Parts	Steel and Aluminium

***DO NOT** dispose of electric equipment together with household waste material.
If electrical appliances are disposed of in landfills or dumps, substances can leak and react and enter into the food chain, damaging your health and well-being. For further information on the disposal of this product, please contact your dealer or your nearest domestic waste collection service.

Warranty

GB

Your new Altrad Belle Bowser Pressure Washer is warranted to the original purchaser for a period of one-year (12 months) from the original date of purchase. The motor and motor controller are warrantied for a period of (3 years). The Altrad Belle warranty is against defects in design, materials and workmanship.

The following are not covered under the Altrad Belle warranty:

1. Damage caused by abuse, misuse, dropping or other similar damage caused by or as a result of failure to follow assembly, operation or user maintenance instructions.
2. Alterations, additions or repairs carried out by persons other than Altrad Belle or their recognised agents.
3. Transportation or shipment costs to and from Altrad Belle or their recognised agents, for repair or assessment against a warranty claim, on any machine.
4. Materials and/or labour costs to renew, repair or replace components due to fair wear and tear.

The following components are not covered by warranty.

- Engine air filter
- Engine spark plug
- Nozzles

- Battery Cover Damage.

Please also consult the Power Unit, Battery & Battery Charger manuals for further information on their warranty details.

Altrad Belle and/or their recognised agents, directors, employees or insurers will not be held liable for consequential or other damages, losses or expenses in connection with or by reason of or the inability to use the machine for any purpose.

Warranty Claims
All warranty claims should firstly be directed to Altrad Belle, either by telephone, by Fax, by Email, or in writing.

For warranty claims:
Tel: +44 (0)1298 84606 Fax: +44 (0)1298 84073 Email : warranty.dept@altrad-belle.com

Write to:
Altrad Belle Warranty Department,
Sheen, Nr. Buxton,
Derbyshire,
SK17 0EU
England.

Warranty Registration:
In the bid for ALTRAD Belle to become greener and more eco friendly, we have now introduced online Warranty registration. To access the registration page of our website, please use the following address:-

http://www.bellegroup.com/index.php?p=warranty_registration

Alternatively, please scan the adjacent QR Code (Quick Response Code) using your smartphone to access the registration page.

Replacement Parts

GB

When maintaining this product only the manufacturers original, genuine replacement parts may be used.

The user will lose any possible claims if replacement parts used are other than the makers original replacement parts.

Replacement parts for this product can be ordered online 24 hours a day, 7 days a week at ***www.Altrad-Belle247.com***

For more information regarding the availability of replacement parts for this product, please contact Altrad Belle using the following contact details:-

Tel:- +44 (0)1298 84606 Fax:- +44 (0)1298 84073 Email:- sales@altrad-belle.com

Alternatively, please scan the adjacent QR Code (Quick Response Code) using your smartphone to access the Altrad Belle online parts portal.

Altrad Belle
Sheen, Nr. Buxton, Derbyshire, SK17 0EU, GB
Tel. +44 (0)1298 84606 - Fax +44 (0)1298 84722 - Email: sales@altrad-belle.com
www.Altrad-Belle.com

BELLE
LIGHT
CONSTRUCTION
EQUIPMENT

EU IMPORTER ADDRESS

ADRESSE DE L'IMPORTATEUR - DIRECCIÓN DEL IMPORTADOR - ENDEREÇO DO IMPORTADOR - ADRES IMPORTEUR IMPORTØRENS ADRESSE - IMPORTEUR ADRESSE - INDIRIZZO DELL'IMPORTATORE - IMPORTÖRENS ADRESS - IMPORTØRADRESSE MAAHANTUOJAN OSOITE - ADRES IMPORTERA - IMPORTIJA AADRESS - IMPORTĒTĀJA ADRESE - IMPORTUOTOJO ADRESAS ADRESA DOVOZCE - ADRESA IMPORTATORULUI - IMPORTŐR CÍME - ADRESA UVOZNIKA - İTHALATÇI ADRESI - ADRESA DOVOZCU

Altrad Investment Authority SAS:
150 Rue Le Pérugin, 34000 Montpellier, France
Tel. +33 (0) 4 67 50 53 66 - Email: admin@altrad.com
www.altrad.com